Which board assembly instructions should you use?

Use **L-Clip** instructions for...

ABC Trim

Aluminum Trim

Deluxe Wood Trim

48 Trim

Use **Z-Clip** instructions for...

Ultra Trim

Presidential Trim

31 Trim

Euro Trim

imagine what's possible™

Find MooreCo™ Vinyl Display Rails **@demco.com**
Search: ***MooreCo™ Vinyl Display Rails***

Call **800.962.4463** or email **custserv@demco.com**

Scroll down for instructions.

Z Clip Install Instructions

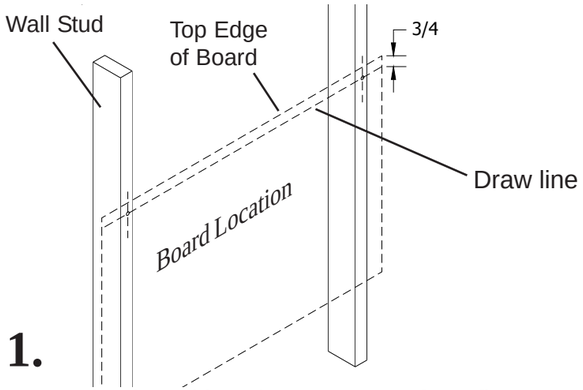

1.

Determine board location. Measure from floor to the top edge of board. Mark with pencil line the corner location. Measure down from top edge of board 3/4", and draw line as shown. Locate stud near each end of board and drill pilot hole along line using 1/8" drill bit.

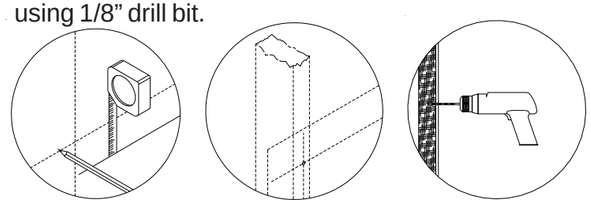

Note:
Install Masonry Anchors (D) into 1/4" Diameter predrill holes for masonry walls.

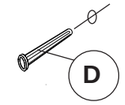

Install Drywall Anchors (E) into 1/4" Diameter predrill holes for sheet rock walls.

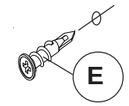

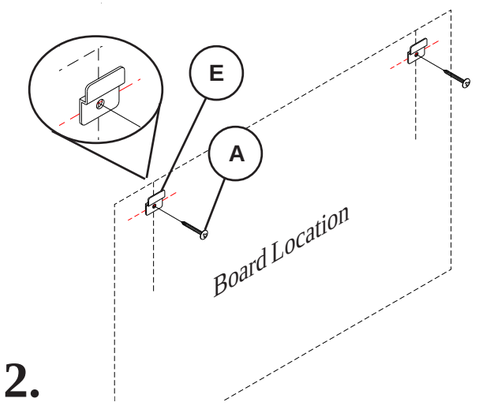

2.

Attach Z-Hangers (E) using Long Screws (A) as shown.

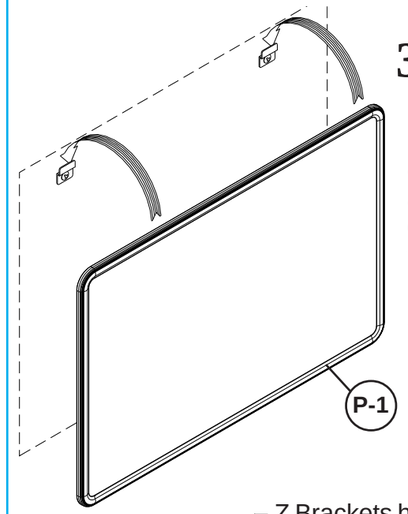

3.

Lift, Tilt, and Slide Board down over the Z-Hangers.
Z-Hangers should catch in the top trim on the back of the board.
Draw line along bottom edge of board.

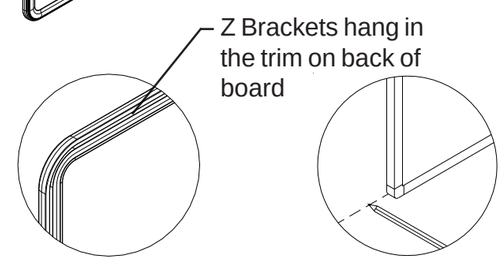

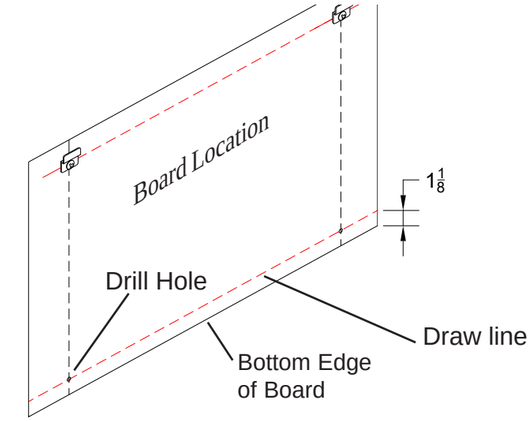

4.

Lift and remove board from the Z-Hangers.
Measure up from bottom line of board 1-1/8", and draw line as shown. Locate stud near each end of board and drill pilot hole along line using 1/8" drill bit.

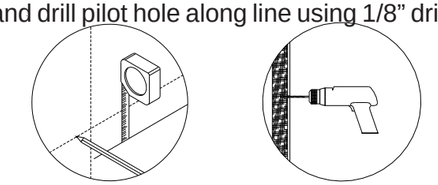

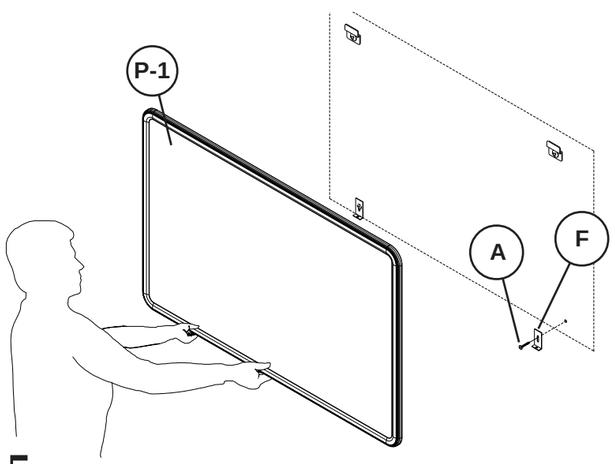

5. Secure 2 bottom brackets (F) to the wall using 2 long screws (A) as shown.
Hang board on the Z-Hangers (E).

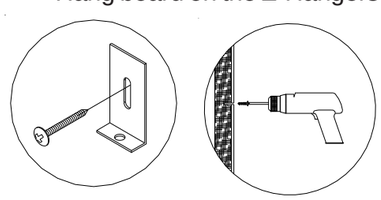

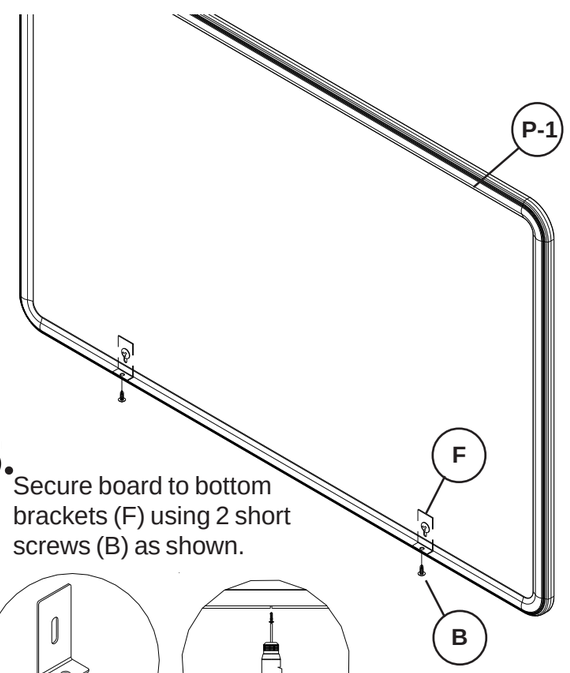

6. Secure board to bottom brackets (F) using 2 short screws (B) as shown.

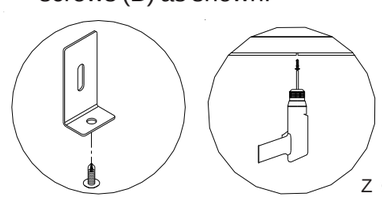

Z Clip Install_05-29-13

Parts List

P1	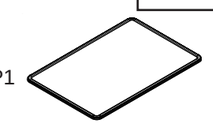	Board

Hardware List

A		Long Screw
B		Short Screw
C		Screw Anchor - Concrete (For Concrete walls)
D	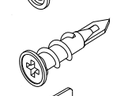	Screw Anchor - Drywall (For Drywall)
E		Z Hanging Bracket
F	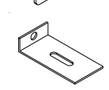	Bottom Bracket

Z Clip Install

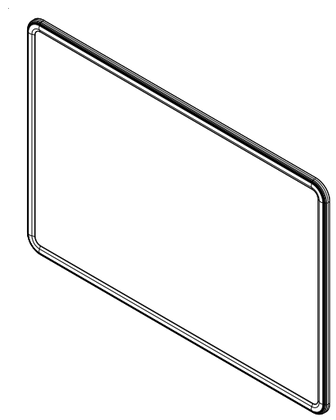

L Clip Install Instructions

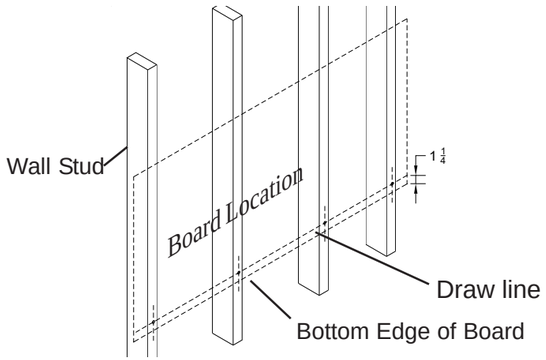

1 Determine board location. Measure from floor to the bottom edge of board. Mark with pencil line the corner location. Measure up from bottom edge of board 1-1/4" and draw line as shown. Locate stud near each end of board and drill pilot holes along line using 1/8" drill bit. See diagram below.

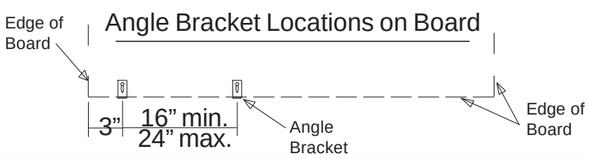

Note:
Install Masonry Anchors (D) into 1/4" Diameter predrill holes for masonry walls.

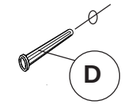

Install Drywall Anchors (E) into 1/4" Diameter predrill holes for sheet rock walls.

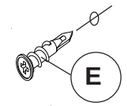

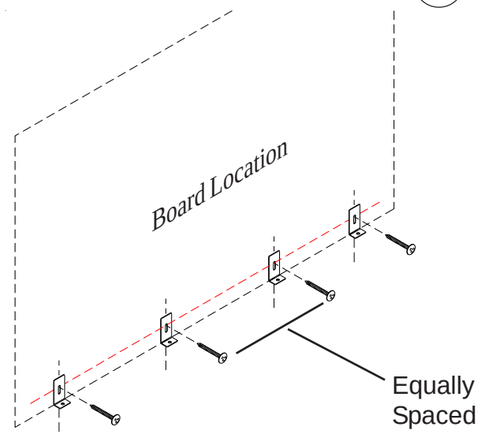

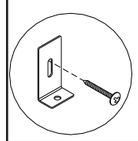

2 Attach ½ the # of Angle Brackets using Long Screws (B) as shown.

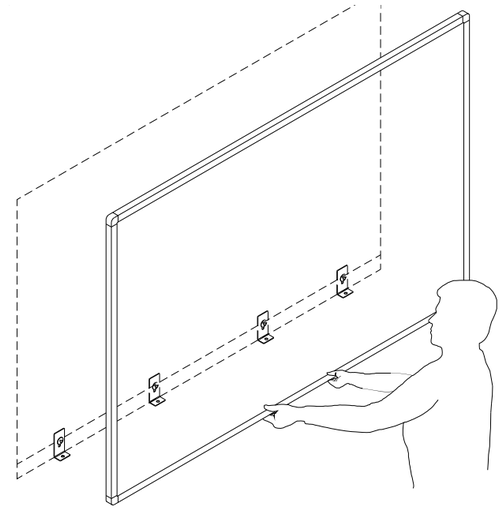

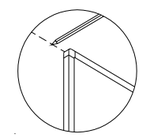

3 Set board on the Angle Brackets. Draw line along top edge of board.

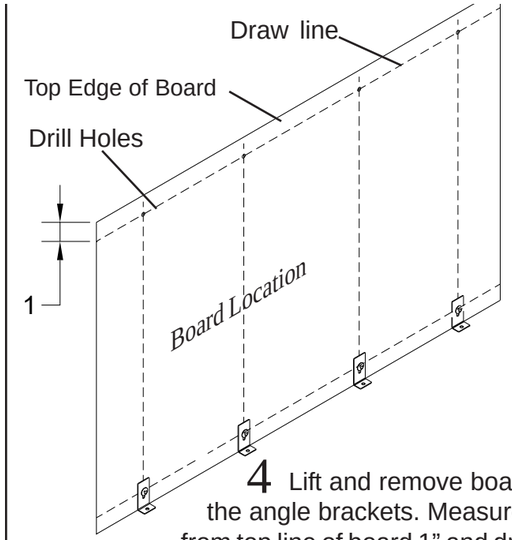

4 Lift and remove board from the angle brackets. Measure down from top line of board 1" and draw line as shown. Locate stud near each end of board and drill pilot hole along line using 1/8" drill bit.

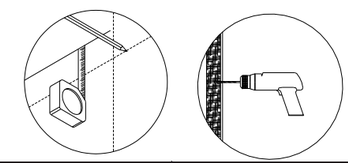

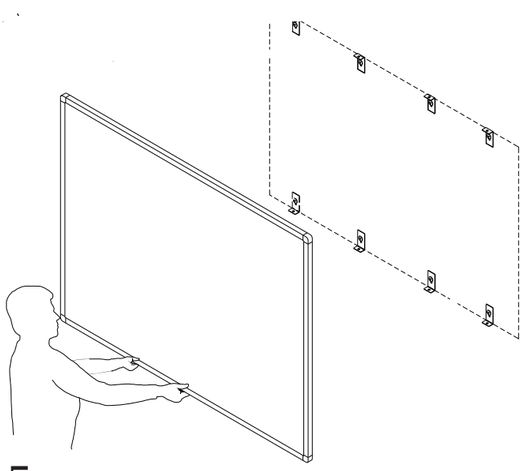

5 Secure top Angle Brackets (A) to the wall using long screws (B) as shown. Follow diagram in Step 1. Set board on the bottom angle brackets.

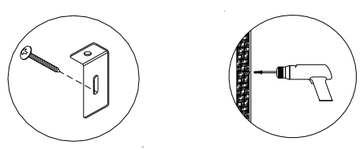

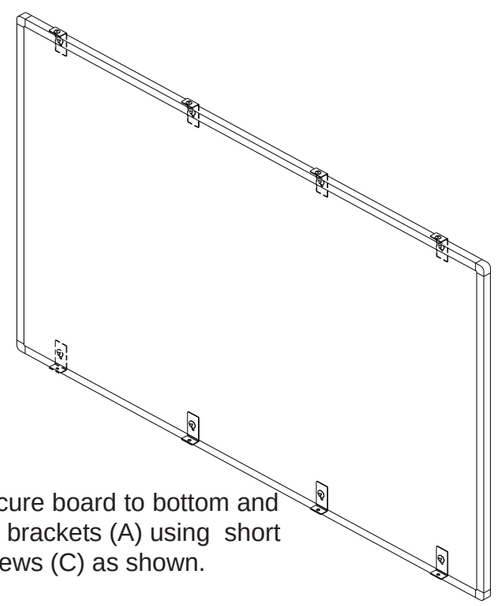

6 Secure board to bottom and top brackets (A) using short screws (C) as shown.

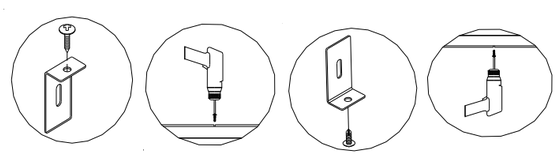

Parts List

P1	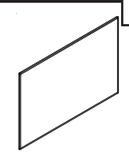	Board

Hardware List

A	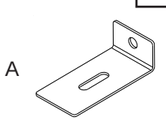	Angle Bracket
B	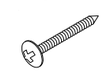	Long Screw
C		Short Screw
D		Screw Anchor-Concrete
E		Screw Anchor-Drywall

L Clip Install_12-12-14

L Clip Install

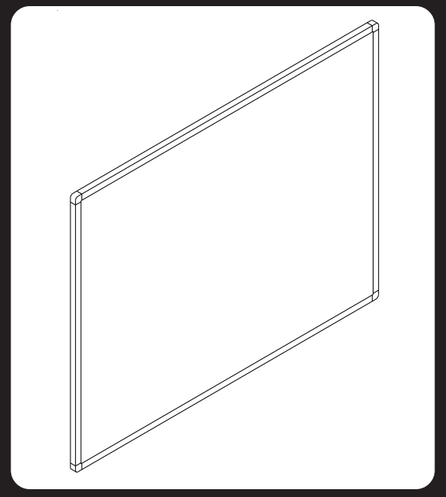

Attention

Please read and follow these instructions! Failure to follow these instructions will void your warranty and could result in board failure and possible injury.

1. **Always use the correct supplied mounting hardware for the type wall your board will be mounted on.**
2. **Use the correct stated predrill for the type anchor you will be using.**
3. **The Angle Brackets and Z Clips <u>MUST</u> be installed according to the layout and spacing as shown below.**

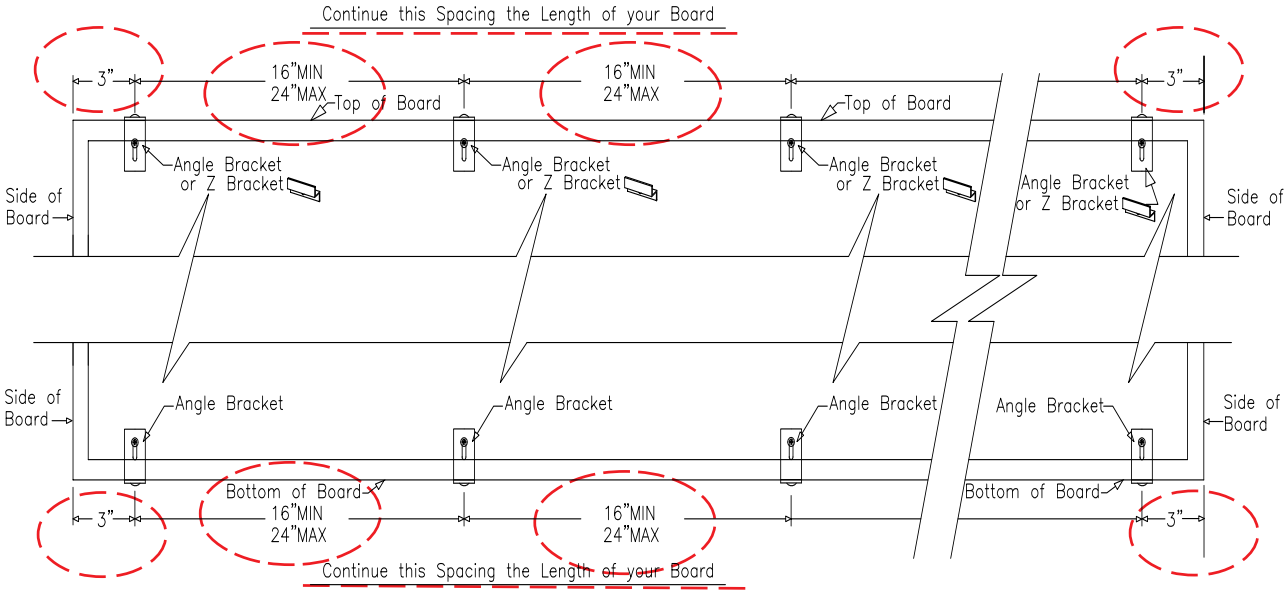

NOTE: For more information, please refer to our web-site:
www.partsandinstructions.com

L-Clip_09-08-15

Proper L-Clip Layout

Your top and bottom L-Clip layouts should be spaced like this for an 8’ wide board.

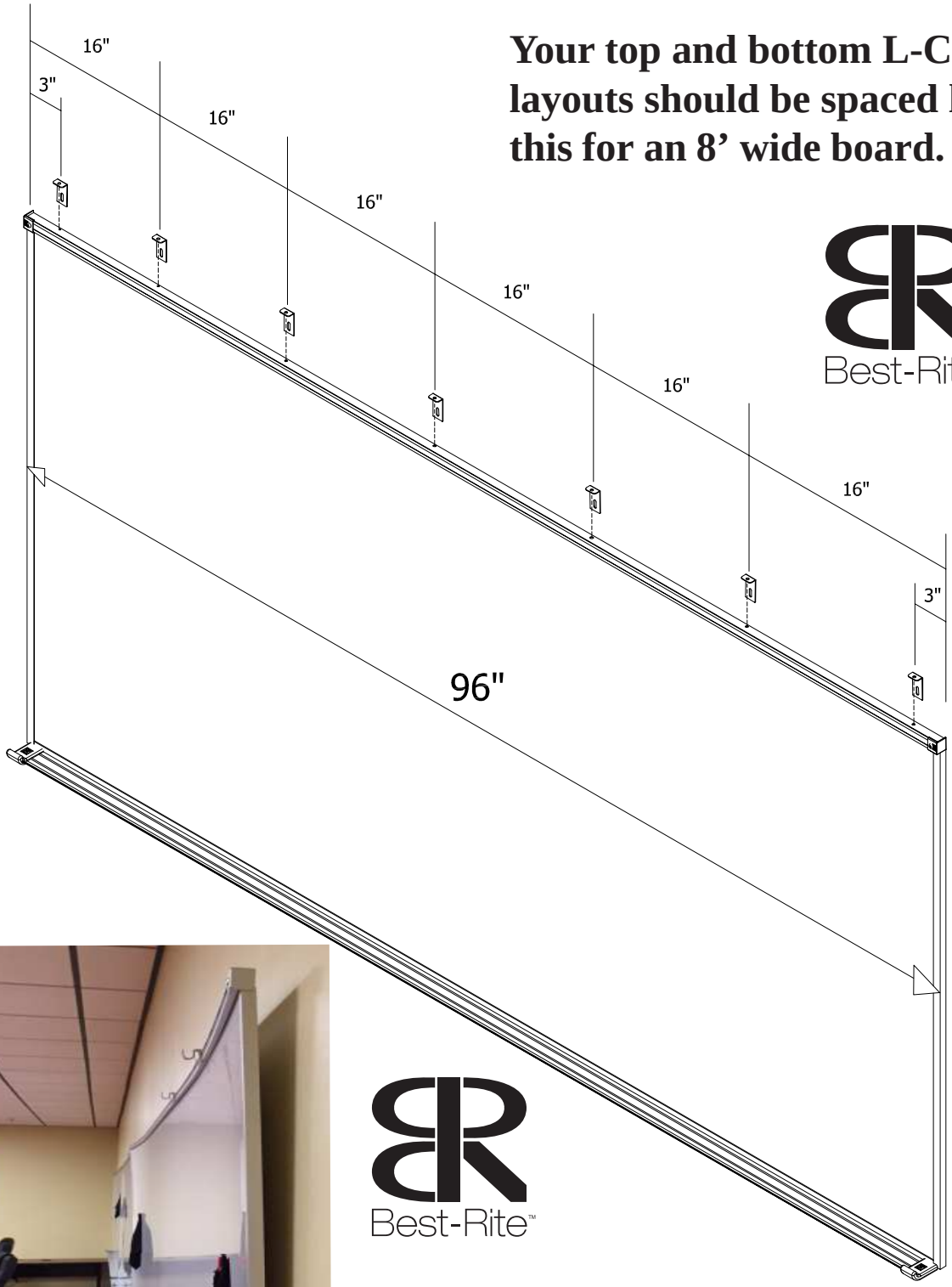

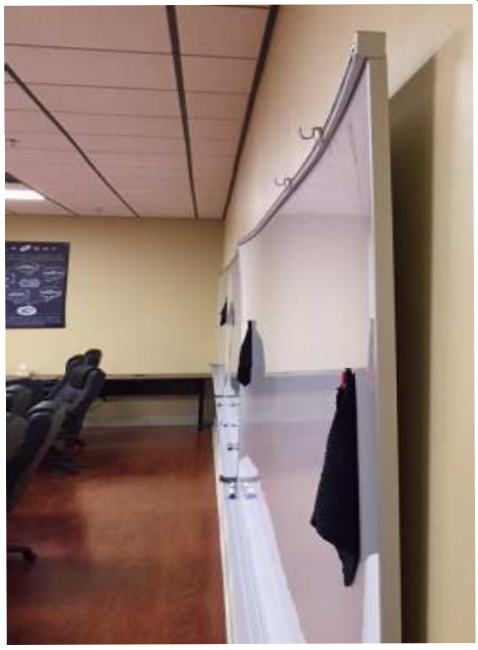

If you don’t use this number of L-Clips on top and bottom, your board could end up like this. Please follow these installation directions.